CERTIFICATE OF COMPLIANCE
SEWAGE SYSTEM

This certificate has been issued this 10 *day of* March *19* 89,

to certify compliance with regulations of Zoning Ordinance, Becker County, Minnesota.

The premises covered by this certificate are legally described as: 50' x 250' lying 160' E of SW corner Lot 5, & .57 AC in Lot 5 lying 210' E of Lot 5 in SW corner

Lake No. _____ *Sec.* 4 *Twp.* 139 *Range* 38 *Twp. Name* Toad Lake

	HOLDING TANK ONLY	SEPTIC TANK
CAPACITY		1500 gls
DISTANCE FROM NEAREST WELL		50 F
DISTANCE FROM LAKE OR STREAM		75 F
DISTANCE FROM OCCUPIED BUILDING		15 F
DISTANCE FROM PROPERTY LINE		+ 10 F

Owner: *Name* Joan Smith

Address C/o Pollack Realty
PO Box 547
Park Rapids MN 56470

± *Zip No.* _____

Permit No. *SP* 17,518-27

Signed by: Floyd Swenby

Zoning Administrator
Becker County, Minnesota

White – Office
Yellow – Owner
Pink – Assessor
Goldenrod — Inspector

BECKER COUNTY ZONING ADMINISTRATION

829 LAKE AVE., BOX 787 — Phone 218-847-4427 — Detroit Lakes, Minn. 56501

Permit No. 17518-27
Date 3-7-89

APPLICATION FOR BUILDING OR SEWAGE PERMIT AND CERTIFICATE OF OCCUPANCY

LEGAL DESCRIPTION AND LOCATION: 50'X250' Lying 160' E of SW Corner Lot 5 & .57 AC. IN Lot 5 LYING 210' E of Lot 5 IN SW Corner

FIRE NUMBER _____

Lake No.	Lake Name	Lake Classif.	Sec.	TWP.	Range	TWP Name
	B. Toad	RD	4	139	38	Toad Lake

2164

IDENTIFICATION: Please Print All Information

	Last Name First Initial	Mailing Address – No. Street, City and State	Zip No.	Tel. No.
Owner	Smith John	Toad Lake		
~~Contractor~~ Send to →	Name Pollack Realty	P.O. Box 547 601 East 1st St. Park Rapids Mn. 56470		

TYPE OF IMPROVEMENT:
( ) New Building ( ) Alteration
Other Compliance Insp.

RESIDENTIAL PROPOSED USE:
(✓) One Family Dwelling
( ) Multiple Dwelling _____ Units

NON-RESIDENTIAL PROPOSED USE:
Specify: _____
Size: _____

ESTIMATED COST OF IMPROVEMENT $ Construction Starting Date:

PRINCIPAL TYPE OF FRAME & BUILDING
( ) Masonry ( ) New Home
( ) Wood Frame ( ) Garage
( ) Structural Steel ( ) Mobile Home
( ) Other – Specify Year _____
( ) Cottage
( ) Septic System
Type of Roof: ( ) Other _____

TYPE OF SEWAGE DISPOSAL:
( ) Public
(✓) Individual Septic Tank, etc.

WATER SUPPLY:
( ) Public (✓) Individual Well
Type _____ Depth _____

MECHANICAL EQUIPMENT:
Elevator: ( ) Yes ( ) No
Air Conditioning: ( ) Yes ( ) No
( ) Central ( ) Unit

DIMENSIONS:
Basement: ( ) Yes ( ) No
Stories above basement: .....
Sq. feet (outside dimension) .....
Bedrooms ..... Baths .....

HEATING:
( ) Electric ( ) Gas ( ) Oil
( ) Coal ( ) None
Other:

SEWAGE DISPOSAL SYSTEM DATA:	SEPTIC TANK	SEEPAGE PIT	DRAIN FIELD
Capacity	Gls.	Sq. Ft.	Sq. Ft.
Distance from nearest well	Ft.	Ft.	Ft.
Distance from lake or stream	Ft.	Ft.	Ft.
Distance from occupied building	Ft.	Ft.	Ft.
Distance from property line	Ft.	Ft.	Ft.
Distance from bottom to Water Table	Ft.	Ft.	Ft.

Compliance Inspection

All distances are shortest distance between nearest points

CHARACTERISTICS:

Lot Area is 50 X 250 square feet. Water frontage is ..... feet.

Building set back from high water mark is ..... feet. (Building Line)

Land height above high water mark at building line is .....feet

Building setback from ( ) State - ( ) County - ( ) Township Highway _____feet from the ( ) Center Line - ( ) Right of Way

Side yard is ..... and ..... feet. Rear yard is ..... feet.

Building will be located ..... feet from septic tank (Sewage System Permit must be obtained before installation).

Building will be located ..... feet from soil absorption system (Cesspool, Drainfield, etc.).

Agreement: I hereby certify that the information contained herein is correct and agree to do the proposed work in accordance with the description above set forth and according to the provisions of the ordinances of Becker County, Minnesota. I further agree that any plans and specifications submitted herewith shall become a part of this permit application. I also understand that this permit is valid for a period of six (6) months. Applicant further agrees that no part of the sewage system shall be covered until it has been inspected and accepted. It shall be the responsibility of the applicant for the permit to notify the County Zoning Administrator, 48 hours before the job is ready for inspection.

Dated _____ Signature of Owner

When signed and approved by the Zoning Administration this becomes your permit. Permission is hereby granted to the above named applicant to perform the work described in the above statement and/or as shown on the sketch. This permit is granted upon the express condition that the person to whom it is granted, and his agent, employees and workmen shall conform in all respects to the ordinances of Becker County, Minnesota. This permit may be revoked at any time upon violation of said ordinances.

Dated _____ Floyd Lemby mf.
Becker County Zoning Administrator

Permit Fee $ 20.00 State Surcharge $ _____ Cormorant Surcharge $ _____

Comments: Herman Olson Christ

INSPECTOR'S CHECK LIST

Make all measurements and computations

	ACTUAL IS ↓	MINIMUM Shall Be ↓ Sq. Ft.
Building Set Back from High Water Mark	Ft.	Ft.
Building Set Back from State Highway	Ft.	Ft.
Side Yard	_____ & _____ Ft.	_____ & _____ Ft.
Rear Yard	Ft.	Ft.
Elevation at Building Line above High Water Mark	Ft.	Ft.

SEWAGE DISPOSAL SYSTEM STATISTICS

CATEGORY	SEPTIC TANK				SEEPAGE PIT				DRAIN FIELD		
	Actual		Should be		Actual		Should be		Actual	Should be	
Capacity		Gls.		Gls.		S F		S F	S F		S F
Distance from Nearest Well		F		F		F	75	F	F	50	F
Distance from Lake or Stream		F		F		F		F	F		F
Distance from Occupied Building		F	10	F		F	20	F	F	20	F
Distance from Property Line		F	10	F		F	10	F	F	10	F
Distance from Bottom to Water Table	—	F	—	F		F	4	F	F	4	F

Inspector's Comments: _____

_____

_____

INTERPRETATION OF ABBREVIATIONS

Gls — Gallons
SF — Square Feet
F — Linear Feet

_____
Inspector's Signature

_____
Title

Inspection
Dated _____ 19

_____
Agency

INSPECTOR'S CHECK LIST

Make all measurements and computations

	ACTUAL IS ↓	MINIMUM Shall Be ↓ Sq. Ft.
Building Set Back from High Water Mark	Ft.	Ft.
Building Set Back from State Highway	Ft.	Ft.
Side Yard	_____ & _____ Ft.	_____ & _____ Ft.
Rear Yard	Ft.	Ft.
Elevation at Building Line above High Water Mark	Ft.	Ft.

SEWAGE DISPOSAL SYSTEM STATISTICS

CATEGORY	SEPTIC TANK				SEEPAGE PIT				DRAIN FIELD		
	Actual		Should be		Actual		Should be		Actual	Should be	
Capacity	1500	Gls.		Gls.		S F		S F	S F		S F
Distance from Nearest Well	50	F		F		F	75	F	F	50	F
Distance from Lake or Stream	75	F		F		F		F	F		F
Distance from Occupied Building	15	F	10	F		F	20	F	F	20	F
Distance from Property Line	40	F	10	F		F	10	F	F	10	F
Distance from Bottom to Water Table	—	F	—	F		F	4	F	F	4	F

Inspector's Comments: Holding TANK ONLY – Joe Stinger Installer

INTERPRETATION OF ABBREVIATIONS

Gls — Gallons
SF — Square Feet
F — Linear Feet

Mark Kuehn
Inspector's Signature

Title

Agency

Inspection Dated 3-9 19 89

White — Office
Yellow — Owner
Pink — Assessor
Goldenrod — Inspector

BECKER COUNTY ZONING ADMINISTRATION

829 LAKE AVE., BOX 787 — Phone 218-847-4427 — Detroit Lakes, Minn. 56501

Permit No. [illegible]

Date 3-7-89

APPLICATION FOR BUILDING OR SEWAGE PERMIT AND CERTIFICATE OF OCCUPANCY

LEGAL DESCRIPTION AND LOCATION: 50' x 250' Lying 100' E of SW Corner of Lot 5 4.57 AC. in Lot 5 of [illegible] Lying W 10' of S 2 of Lot 5 in SW Corner

FIRE NUMBER

Lake No.	Lake Name	Lake Classif.	Sec.	TWP	Range	TWP Name
	B. Toad	KD	4	139	38	Toad Lake

3164

IDENTIFICATION: Please Print All Information

	Last Name First Initial	Mailing Address— No. Street, City and State	Zip No.	Tel. No.
Owner:	Smith John	Toad Lake		
Contractor	Name Pollack Realty	P.O. Box 549		
		601 East 1st St. Park Rapids	Mn.	56470

Send to →

TYPE OF IMPROVEMENT:
( ) New Building ( ) Alteration
Other Employee Bldg.

RESIDENTIAL PROPOSED USE:
(✓) One Family Dwelling
( ) Multiple Dwelling _____ Units

NON-RESIDENTIAL PROPOSED USE:
Specify: _____
Size: _____

ESTIMATED COST OF IMPROVEMENT $ Construction Starting Date:

PRINCIPAL TYPE OF FRAME & BUILDING
( ) Masonry ( ) New Home
( ) Wood Frame ( ) Garage
( ) Structural Steel ( ) Mobile Home
( ) Other — Specify Year _____
( ) Cottage
( ) Septic System
Type of Roof: ( ) Other

TYPE OF SEWAGE DISPOSAL:
( ) Public
(✓) Individual Septic Tank, etc.

WATER SUPPLY:
( ) Public (✓) Individual Well
Type _____ Depth _____

MECHANICAL EQUIPMENT:
Elevator: ( ) Yes ( ) No
Air Conditioning: ( ) Yes ( ) No
( ) Central ( ) Unit

DIMENSIONS:
Basement: ( ) Yes ( ) No
Stories above basement: .....
Sq. feet (outside dimension) .....
Bedrooms ..... Baths .....

HEATING:
( ) Electric ( ) Gas ( ) Oil
( ) Coal ( ) None
Other:

SEWAGE DISPOSAL SYSTEM DATA:	SEPTIC TANK	SEEPAGE PIT	DRAIN FIELD
Capacity	1000 Gls.	Sq. Ft.	Sq. Ft.
Distance from nearest well	50 Ft.	Ft.	Ft.
Distance from lake or stream	25 Ft.	Ft.	Ft.
Distance from occupied building	Ft.	Ft.	Ft.
Distance from property line	18 Ft.	Ft.	Ft.
Distance from bottom to Water Table	110 Ft.	Ft.	Ft.

All distances are shortest distance between nearest points

CHARACTERISTICS:

Lot Area is 50 x 250 square feet. Water frontage is ..... feet.

Building set back from high water mark is ..... feet. (Building Line)

Land height above high water mark at building line is .....feet

Building setback from ( ) State (✓) County - (✓) Township Highway _____ feet from the ( ) Center Line - ( ) Right of Way

Side yard is ..... and ..... feet. Rear yard is >[illegible] feet.

Building will be located ..... feet from septic tank (Sewage System Permit must be obtained before installation).

Building will be located ..... feet from soil absorption system (Cesspool, Drainfield, etc.).

Agreement: I hereby certify that the information contained herein is correct and agree to do the proposed work in accordance with the description above set forth and according to the provisions of the ordinances of Becker County, Minnesota. I further agree that any plans and specifications submitted herewith shall become a part of this permit application. I also understand that this permit is valid for a period of six (6) months. Applicant further agrees that no part of the sewage system shall be covered until it has been inspected and accepted. It shall be the responsibility of the applicant for the permit to notify the County Zoning Administrator, 48 hours before the job is ready for inspection.

Dated _____ Signature of Owner

When signed and approved by the Zoning Administration this becomes your permit. Permission is hereby granted to the above named applicant to perform the work described in the above statement and/or as shown on the sketch. This permit is granted upon the express condition that the person to whom it is granted, and his agent, employees and workmen shall conform in all respects to the ordinances of Becker County, Minnesota. This permit may be revoked at any time upon violation of said ordinances.

Dated _____ Becker County Zoning Administrator

Permit Fee $ 20.00 State Surcharge $ _____ Cormorant Surcharge $ _____

Comments: Nonresidential

R 33.0028.000

KARL BLAKELY
6307 PAINTED TURLE ROAD
LINO LAKES, MN 55014
FIRE #T337

1500 GALLON HOLDING TANK
INSTALLED 1988

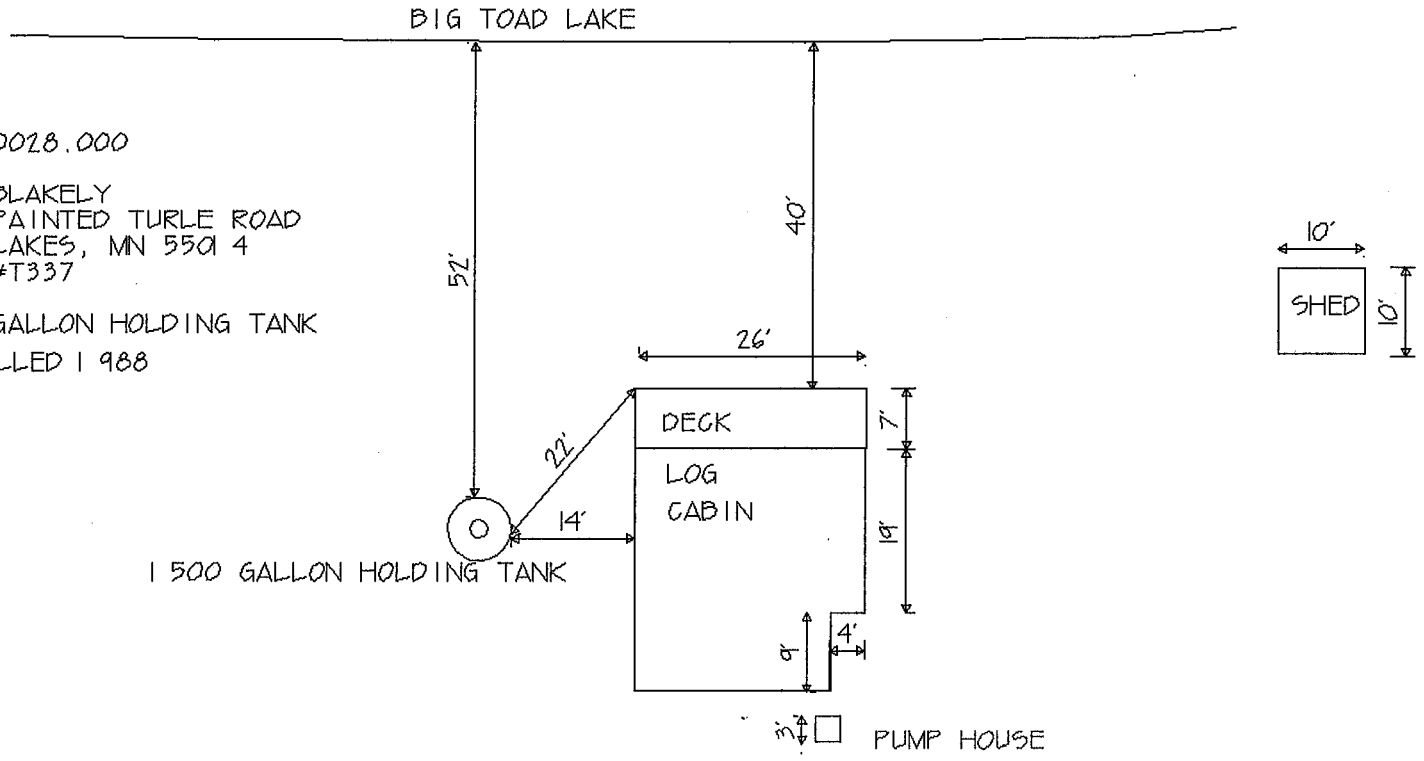

CERTIFICATE OF COMPLIANCE
SEWAGE SYSTEM

This certificate has been issued this 13 *day of* OCTOBER *19* 78,

to certify compliance with regulations of Zoning Ordinance, Becker County, Minnesota.

The premises covered by this certificate are legally described as:

Lake No. 107 *Sec.* 4 *Twp.* 139 *Range* 38 *Twp. Name* TOAD LAKE

HOLDING TANK ONLY, Holding Tank is 1600 gal., 50 ft. from nearest well, 75 ft. from lake, 15 ft. from occupied building, 10 ft. from property line.

Owner: *Name* DR. H.M. OLSON

Address 1111 BREEZY MEADOW SPENCER, IOWA 51301

Zip No.

Permit No. *SP* 13-3985-27

Signed by: Floyd Svenby

Zoning Administrator
Becker County, Minnesota

White — Office
Yellow — Owner
Pink — Assessor
Blue — Inspector

BECKER COUNTY ZONING ADMINISTRATION

13-3985-27

Permit No. 9-3985-27

COUNTY COURT HOUSE — Phone 218-847-7721 — Detroit Lakes, Minn. 56501

Date 6-14-76

APPLICATION FOR BUILDING OR SEWAGE PERMIT AND CERTIFICATE OF OCCUPANCY

LEGAL DESCRIPTION AND LOCATION

North Shore Lot - 5

Lake No.	Lake Name	Lake Classif.	Sec.	TWP.	Range	TWP Name
107	Tood Lake	R.D	4	139	38	Tood Lake

IDENTIFICATION: Please Print All Information

	Last Name First Initial	Mailing Address— No. Street, City and State	Zip No.	Tel. No.
Owner	Olson H.M. DR.	111 BREEZY MEADOW SPENCER, IOWA	51301	
Contractor	Name Doug SWENSON			

1726
m

TYPE OF IMPROVEMENT:
( ) New Building ( ) Alteration
Other Bath

RESIDENTIAL PROPOSED USE:
(✓) One Family Dwelling
( ) Multiple Dwelling _____ Units

NON-RESIDENTIAL PROPOSED USE:
Specify: Small addition to house
Size: Bath Rm ~~6x6~~ 3x8

ESTIMATED COST OF IMPROVEMENT $ Construction Starting Date:

PRINCIPAL TYPE OF FRAME:
( ) Masonry
(X) Wood Frame
( ) Structural Steel
( ) Other — Specify

Type of Roof:

TYPE OF SEWAGE DISPOSAL:
( ) Public
(X) Individual Septic Tank, etc.

WATER SUPPLY:
( ) Public
(X) Individual Well

MECHANICAL EQUIPMENT:
Elevator: ( ) Yes ( ) No
Air Conditioning: ( ) Yes ( ) No
( ) Central ( ) Unit

DIMENSIONS:
Basement: ( ) Yes (✓) No
Stories above basement: .....
Sq. feet (outside dimension) .....
Bedrooms 2 Baths 1

HEATING:
( ) Electric ( ) Gas ( ) Oil
( ) Coal ( ) None
Other:

SEWAGE DISPOSAL SYSTEM DATA:	SEPTIC TANK	SEEPAGE PIT	DRAIN FIELD
Capacity	1200 Gls.	Sq. Ft.	Sq. Ft.
Distance from nearest well	50 Ft.	Ft.	Ft.
Distance from lake or stream	75 Ft.	Ft.	Ft.
Distance from occupied building	10 Ft.	Ft.	Ft.
Distance from property line	10 Ft.	Ft.	Ft.
Distance from bottom to Water Table	Ft.	Ft.	Ft.

Holding TANK ONLY

HOLDING TANK ONLY

All distances are shortest distance between nearest points

CHARACTERISTICS:

Lot Area is ..... square feet. Water frontage is ..... feet.

Building set back from high water mark is ..... feet. (Building Line)

Land height above high water mark at building line is .....feet

Building set back from State highway is ..... feet — from road or street is .... feet.

Side yard is 10 and over 10 feet. Rear yard is ..... feet.

Building will be located over 10 feet from septic tank (Sewage System Permit must be obtained before installation).

Building will be located none feet from soil absorption system (Cesspool, Drainfield, etc.).

Agreement: I hereby certify that the information contained herein is correct and agree to do the proposed work in accordance with the description above set forth and according to the provisions of the ordinances of Becker County, Minnesota. I further agree that any plans and specifications submitted herewith shall become a part of this permit application. I also understand that this permit is valid for a period of six (6) months. Applicant further agrees that no part of the sewage system shall be covered until it has been inspected and accepted. It shall be the responsibility of the applicant for the permit to notify the County Zoning Administrator, 48 hours before the job is ready for inspection.

Dated 6-14-76

Signature of Owner

Permit: Permission is hereby granted to the above named applicant to perform the work described in the above statement. This permit is granted upon the express condition that the person to whom it is granted, and his agent, employees and workmen shall conform in all respects to the ordinances of Becker County, Minnesota. This permit may be revoked at any time upon violation of said ordinances.

Dated 7-9-76

Becker County Zoning Administrator

Permit Fee $ 10 — State Surcharge $ 50

Comments: ~~Not paid~~
Checked 6-14-76 - Mod. - Doug Swenson will stop and pay chg.

INSPECTOR'S CHECK LIST

Make all measurements and computations

	ACTUAL IS ↓	MINIMUM Shall Be ↓ Sq. Ft.
Building Set Back from High Water Mark	Ft.	Ft.
Building Set Back from State Highway	Ft.	Ft.
Side Yard	_____ & _____ Ft.	_____ & _____ Ft.
Rear Yard	Ft.	Ft.
Elevation at Building Line above High Water Mark	Ft.	Ft.

SEWAGE DISPOSAL SYSTEM STATISTICS

CATEGORY	SEPTIC TANK				SEEPAGE PIT				DRAIN FIELD		
	Actual		Should be		Actual		Should be		Actual	Should be	
Capacity	1000	Gls.	1000	Gls.		S F		S F	S F		S F
Distance from Nearest Well	50	F	50	F		F	75	F	F	50	F
Distance from Lake or Stream	75	F	75	F		F		F	F		F
Distance from Occupied Building	15	F	10	F		F	20	F	F	20	F
Distance from Property Line	10	F	10	F		F	10	F	F	10	F
Distance from Bottom to Water Table	—	F	—	F		F	4	F	F	4	F

Inspector's Comments: Doug Swenson put addition to Cabin & Joe Stengs Installed Holding tank Only

INTERPRETATION OF ABBREVIATIONS
Gls — Gallons
SF — Square Feet
F — Linear Feet

Mack Kuehne
Inspector's Signature

Bldg. Inspector
Title

Inspection Dated June 16 19 76

Becker County
Agency

White — Office
Yellow — Owner
Pink — Assessor
Blue — Inspector

BECKER COUNTY ZONING ADMINISTRATION

Permit No._____

COUNTY COURT HOUSE — Phone 218-847-7721 — Detroit Lakes, Minn. 56501 Date_____

APPLICATION FOR BUILDING OR SEWAGE PERMIT AND CERTIFICATE OF OCCUPANCY

LEGAL DESCRIPTION AND LOCATION							
	Lake No.	Lake Name	Lake Classif.	Sec.	TWP	Range	TWP Name

IDENTIFICATION: Please Print All Information

	Last Name First Initial	Mailing Address— No. Street, City and State	Zip No.	Tel. No.
Owner				
Contractor	Name			

TYPE OF IMPROVEMENT:
( ) New Building ( ) Alteration
Other_____

RESIDENTIAL PROPOSED USE:
( ) One Family Dwelling
( ) Multiple Dwelling _____ Units

NON—RESIDENTIAL PROPOSED USE:
Specify:_____
Size:_____

ESTIMATED COST OF IMPROVEMENT $ Construction Starting Date:

PRINCIPAL TYPE OF FRAME:
( ) Masonry
( ) Wood Frame
( ) Structural Steel
( ) Other — Specify

Type of Roof:

TYPE OF SEWAGE DISPOSAL:
( ) Public
( ) Individual Septic Tank, etc.

WATER SUPPLY:
( ) Public
( ) Individual Well

MECHANICAL EQUIPMENT :
Elevator: ( ) Yes ( ) No
Air Conditioning: ( ) Yes ( ) No
( ) Central ( ) Unit

DIMENSIONS:
Basement: ( ) Yes ( ) No
Stories above basement: .....
Sq. feet (outside dimension) .....
Bedrooms ..... Baths .....

HEATING:
( ) Electric ( ) Gas ( ) Oil
( ) Coal ( ) None
Other:

SEWAGE DISPOSAL SYSTEM DATA:	SEPTIC TANK	SEEPAGE PIT	DRAIN FIELD
Capacity	Gls.	Sq. Ft.	Sq. Ft.
Distance from nearest well	Ft.	Ft.	Ft.
Distance from lake or stream	Ft.	Ft.	Ft.
Distance from occupied building	Ft.	Ft.	Ft.
Distance from property line	Ft.	Ft.	Ft.
Distance from bottom to Water Table	Ft.	Ft.	Ft.

All distances are shortest distance between nearest points

HOLDING TANK ONLY

CHARACTERISTICS:

Lot Area is ..... square feet. Water frontage is ..... feet.

Building set back from high water mark is ..... feet. (Building Line)

Land height above high water mark at building line is .....feet

Building set back from State highway is ..... feet — from road or street is .... feet.

Side yard is ..... and ..... feet. Rear yard is ..... feet.

Building will be located ..... feet from septic tank (Sewage System Permit must be obtained before installation).

Building will be located ..... feet from soil absorption system (Cesspool, Drainfield, etc.).

Agreement: I hereby certify that the information contained herein is correct and agree to do the proposed work in accordance with the description above set forth and according to the provisions of the ordinances of Becker County, Minnesota. I further agree that any plans and specifications submitted herewith shall become a part of this permit application. I also understand that this permit is valid for a period of six (6) months. Applicant further agrees that no part of the sewage system shall be covered until it has been inspected and accepted. It shall be the responsibility of the applicant for the permit to notify the County Zoning Administrator, 48 hours before the job is ready for inspection.

Dated_____ _____
Signature of Owner

Permit: Permission is hereby granted to the above named applicant to perform the work described in the above statement. This permit is granted upon the express condition that the person to whom it is granted, and his agent, employees and workmen shall conform in all respects to the ordinances of Becker County, Minnesota. This permit may be revoked at any time upon violation of said ordinances.

Dated_____ _____
Becker County Zoning Administrator

Permit Fee $_____ State Surcharge $_____

Comments:_____

Scale: Each grid equals _____ feet/inches.

GRID PLOT PLAN SKETCHING FORM

Application for Building Permit Dated 6-14 19 76

Application for Sewage System Permit Dated 6-14 19 76

Building Permit Number _____ Sewage System Permit Number _____

Applicant agrees that this plot plan is a part of application (s) indicated above.

Dated 6-14 19 76.

_____
Signature

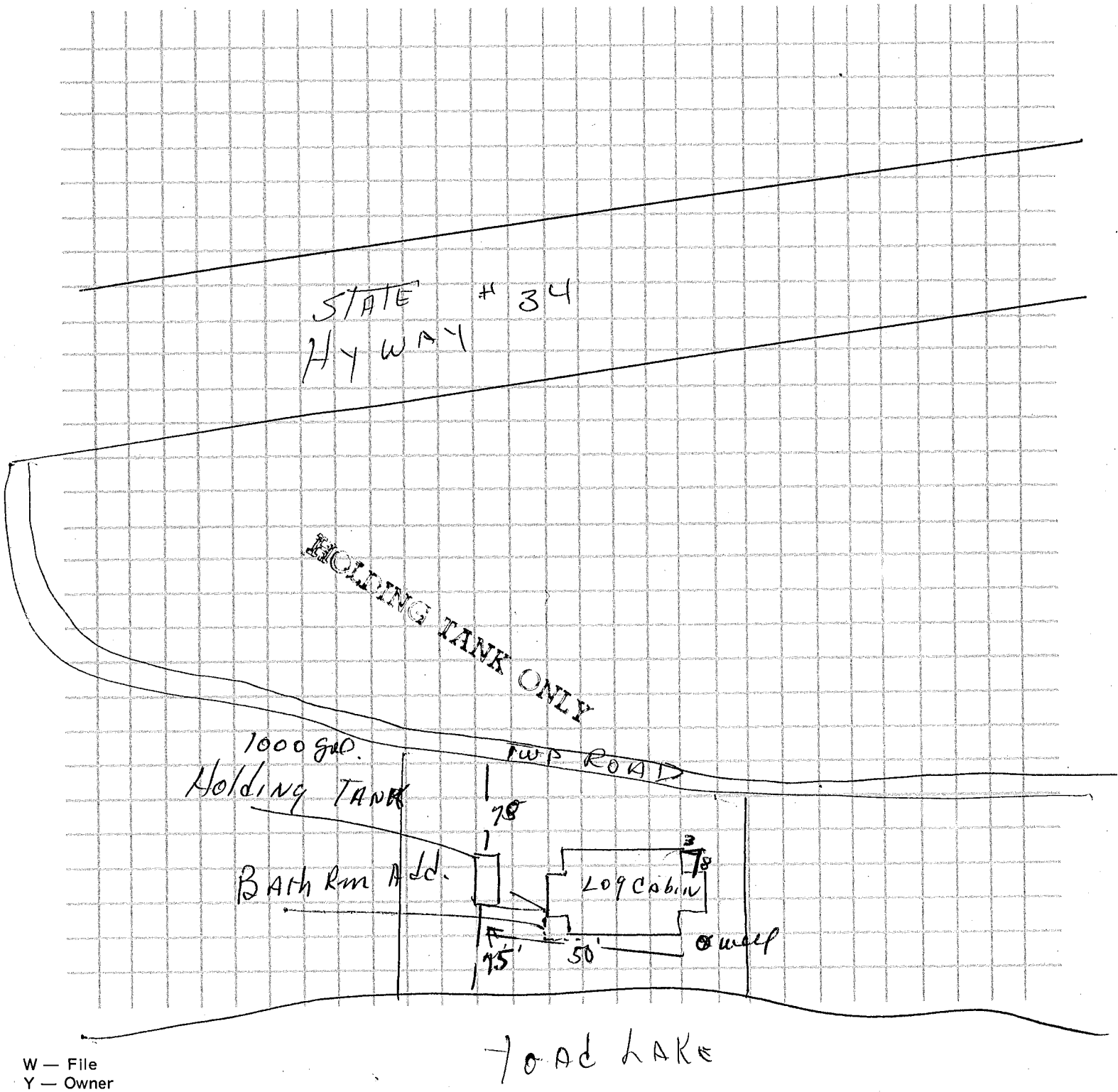

W — File
Y — Owner
B — Building Inspector

County copy

330030000

Control Agency

520 Lafayette Road North
St. Paul, MN 55155-4194

Compliance Inspection Form

Existing Subsurface Sewage Treatment Systems (SSTS)

Doc Type: Compliance and Enforcement

RECEIVED
JUN - 4 2020
ZONING

For local tracking purposes:

Inspection results based on Minnesota Pollution Control Agency (MPCA) requirements and attached forms – additional local requirements may also apply.

Submit completed form to Local Unit of Government (LUG) and system owner within 15 days

System Status

System status on date (mm/dd/yyyy): 6-2-2020

☒ **Compliant – Certificate of Compliance**
(Valid for 3 years from report date, unless shorter time frame outlined in Local Ordinance.)

☐ **Noncompliant – Notice of Noncompliance**
(See Upgrade Requirements on page 3.)

Reason(s) for noncompliance ***(check all applicable)***

- ☐ Impact on Public Health *(Compliance Component #1) – Imminent threat to public health and safety*
- ☐ Other Compliance Conditions *(Compliance Component #3) – Imminent threat to public health and safety*
- ☐ Tank Integrity *(Compliance Component #2) – Failing to protect groundwater*
- ☐ Other Compliance Conditions *(Compliance Component #3) – Failing to protect groundwater*
- ☐ Soil Separation *(Compliance Component #4) – Failing to protect groundwater*
- ☐ Operating permit/monitoring plan requirements *(Compliance Component #5) – Noncompliant*

Property Information

Parcel ID# or Sec/Twp/Range: 330030000

Property address: Karl Blakely

Reason for inspection:

Property owner: 43265 218th St

Owner's phone: 651-775-2593

or

Owner's representative:

Representative phone:

Local regulatory authority:

Regulatory authority phone:

Brief system description: 1000 gal holding tank

Comments or recommendations: 6305 Painted Turtle Rd

Lino Lakes, MN 55014

Certification

I hereby certify that all the necessary information has been gathered to determine the compliance status of this system. No determination of future system performance has been nor can be made due to unknown conditions during system construction, possible abuse of the system, inadequate maintenance, or future water usage.

Inspector name: [signature]

Certification number:

Business name:

License number: 478

Inspector signature: [signature]

Phone number:

Necessary or Locally Required Attachments

☒ Soil boring logs ☒ System/As-built drawing ☐ Forms per local ordinance

☐ Other information (list):

Property address: _____ Inspector initials/Date: _____ (mm/dd/yyyy)

1. Impact on Public Health – Compliance component #1 of 5

Compliance criteria:

System discharges sewage to the ground surface.	☐ Yes ☒ No
System discharges sewage to drain tile or surface waters.	☐ Yes ☒ No
System causes sewage backup into dwelling or establishment.	☐ Yes ☒ No

Any "yes" answer above indicates the system is an imminent threat to public health and safety.

Comments/Explanation:

Verification method(s):

- ☒ Searched for surface outlet
- ☒ Searched for seeping in yard/backup in home
- ☐ Excessive ponding in soil system/D-boxes
- ☐ Homeowner testimony *(See Comments/Explanation)*
- ☐ "Black soil" above soil dispersal system
- ☐ System requires "emergency" pumping
- ☐ Performed dye test
- ☐ Unable to verify *(See Comments/Explanation)*
- ☐ Other methods not listed *(See Comments/Explanation)*

2. Tank Integrity – Compliance component #2 of 5

Compliance criteria:

System consists of a seepage pit, cesspool, drywell, or leaching pit. *Seepage pits meeting 7080.2550 may be compliant if allowed in local ordinance.*	☐ Yes ☒ No
Sewage tank(s) leak below their designed operating depth. If yes, which sewage tank(s) leaks:	☐ Yes ☒ No

Any "yes" answer above indicates the system is failing to protect groundwater.

Comments/Explanation:

Verification method(s):

- ☒ Probed tank(s) bottom
- ☐ Examined construction records
- ☐ Examined Tank Integrity Form *(Attach)*
- ☐ Observed liquid level below operating depth
- ☐ Examined empty (pumped) tanks(s)
- ☐ Probed outside tank(s) for "black soil"
- ☐ Unable to verify *(See Comments/Explanation)*
- ☐ Other methods not listed *(See Comments/Explanation)*

3. Other Compliance Conditions – Compliance component #3 of 5

a. Maintenance hole covers are damaged, cracked, unsecured, or appear to be structurally unsound. ☐ Yes* ☒ No ☐ Unknown

b. Other issues *(electrical hazards, etc.)* to immediately and adversely impact public health or safety. ☐ Yes* ☒ No ☐ Unknown
***System is an imminent threat to public health and safety.**

Explain:

c. System is non-protective of ground water for other conditions as determined by inspector. ☐ Yes* ☒ No
***System is failing to protect groundwater.**

Explain:

Property address: _____ Inspector initials/Date: _____ | _____ (mm/dd/yyyy)

4. Soil Separation – Compliance component #4 of 5

Date of installation: _____ (mm/dd/yyyy) ☐ Unknown

Shoreland/Wellhead protection/Food beverage lodging? ☐ Yes ☐ No

Compliance criteria:

For systems built prior to April 1, 1996, and not located in Shoreland or Wellhead Protection Area or not serving a food, beverage or lodging establishment: Drainfield has at least a two-foot vertical separation distance from periodically saturated soil or bedrock.	☐ Yes ☐ No
Non-performance systems built April 1, 1996, or later or for non-performance systems located in Shoreland or Wellhead Protection Areas or serving a food, beverage, or lodging establishment: Drainfield has a three-foot vertical separation distance from periodically saturated soil or bedrock.*	☑ Yes ☐ No
"Experimental", "Other", or "Performance" systems built under pre-2008 Rules; Type IV or V systems built under 2008 Rules (7080.2350 or 7080.2400 (Advanced Inspector License required) Drainfield meets the designed vertical separation distance from periodically saturated soil or bedrock.	☐ Yes ☐ No

Any "no" answer above indicates the system is failing to protect groundwater.

Verification method(s):

Soil observation does not expire. Previous soil observations by two independent parties are sufficient, unless site conditions have been altered or local requirements differ.

☐ Conducted soil observation(s) *(Attach boring logs)*

☐ Two previous verifications (*Attach boring logs)*

☐ Not applicable *(Holding tank(s), no drainfield)*

☐ Unable to verify *(See Comments/Explanation)*

☐ Other *(See Comments/Explanation)*

Comments/Explanation: holding tank no soils needed

Indicate depths or elevations

A. Bottom of distribution media	
B. Periodically saturated soil/bedrock	
C. System separation	
D. Required compliance separation*	

*May be reduced up to 15 percent if allowed by Local Ordinance.

5. Operating Permit and Nitrogen BMP* – Compliance component #5 of 5 ☑ Not applicable

Is the system operated under an Operating Permit? ☐ Yes ☐ No **If "yes", A below is required**

Is the system required to employ a Nitrogen BMP? ☐ Yes ☐ No **If "yes", B below is required**

BMP = Best Management Practice(s) specified in the system design

If the answer to both questions is "no", this section does not need to be completed.

Compliance criteria

a. Operating Permit number: _____ Have the Operating Permit requirements been met?	☐ Yes ☐ No
b. Is the required nitrogen BMP in place and properly functioning?	☐ Yes ☐ No

Any "no" answer indicates Noncompliance.

Upgrade Requirements *(Minn. Stat. § 115.55) An imminent threat to public health and safety (ITPHS) must be upgraded, replaced, or its use discontinued within ten months of receipt of this notice or within a shorter period if required by local ordinance. If the system is failing to protect ground water, the system must be upgraded, replaced, or its use discontinued within the time required by local ordinance. If an existing system is not failing as defined in law, and has at least two feet of design soil separation, then the system need not be upgraded, repaired, replaced, or its use discontinued, notwithstanding any local ordinance that is more strict. This provision does not apply to systems in shoreland areas, Wellhead Protection Areas, or those used in connection with food, beverage, and lodging establishments as defined in law.*

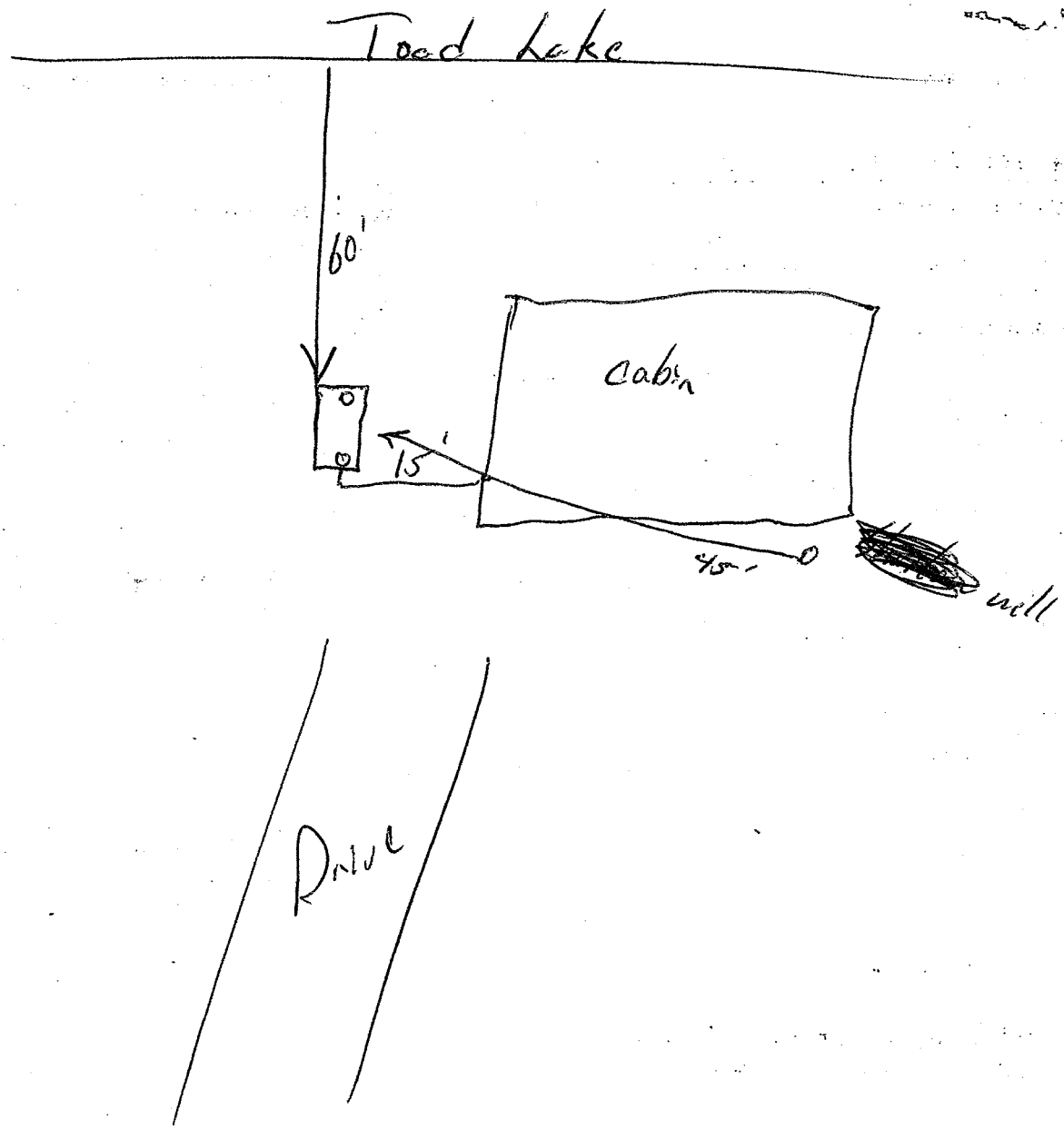

Inspection does not Imply or gaurantee future hydraulic functioning, only what conditions were found on date of Inspection